TEAR SHEET

Gael Large Articulating Wall Light

Item # RB 2061WI/AB-L

Designer: Ray Booth

Height: 17.5"
Width: 14"
Extension: 30"
Backplate: 6" x 11" Rectangle
Finishes: AB, PN, WI/AB
Shade Treatments: L
Shade Details: 14" x 14" x 8"
Socket: E26 Keyless w/ Dimmer on Backplate
Wattage: 15 LED A19
Weight: 10 Pounds

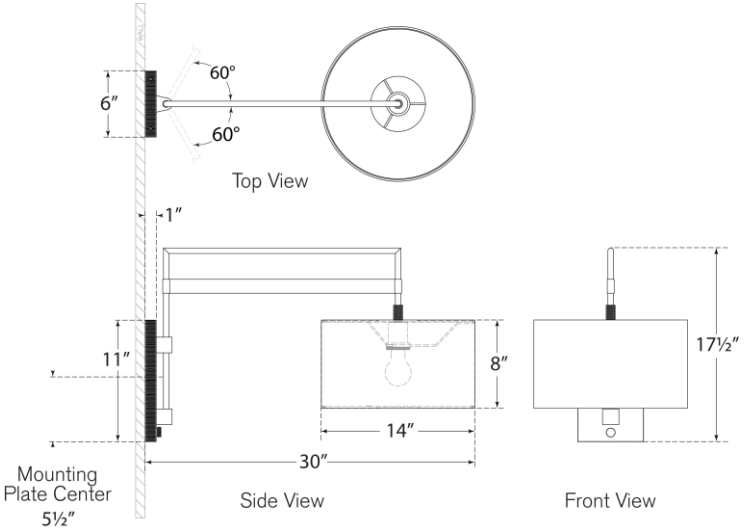

VISUAL COMFORT & CO.